Technische Daten/ Technical Data

KLUDI BOZZ
concealed single lever basin mixer
DN 15

Ref.: 38245N076

Finishes:
N0 Brushed Gold (18) PVD

Product description
Manufacturer KLUDI GmbH & Co. KG
Typ: KLUDI BOZZ
concealed single lever basin mixer
Ref.: 38245N076

concealed single lever basin mixer
projection 230mm
trim set without pre-installation set
pre installation set KLUDI Ref.: 38243
vertical wall mounted
solid lever, metal
aerator, S-Pointer M24 PCA
flow rate at 3 bar 5 l/min.
fixed spout

Produktabbildung/ Product picture

Maßzeichnung/ Dimensional drawing

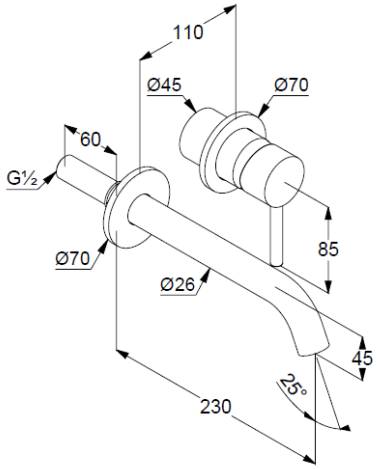
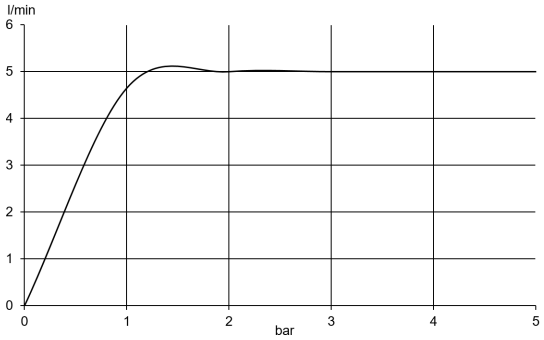
Durchfluss/ Flow rate